Comparative Study of Conventional Random Diagonal Code and Random Diagonal Code with EDFA for Spectral Amplitude-Coding Optical CDMA System

Bhanu Priya[1] and Himali Sarangal[2]
[1,2]*Department of Electronics and Communication Engineering,*
GNDU Regional Campus Jalandhar, Punjab, India
E-mail: [1]bpriya812@gmail.com, [2]himali.sarangal@gmail.com

***Abstract*—In this paper we present and compare the performance of random diagonal (RD) code for spectral-amplitude coding OCDMA (SAC-OCDMA) system using a newly proposed spectral direct detection technique and with the use of EDFA. By comparing the theoretical and simulation results taken from the commercial optical systems simulator "Optisystem 7.0 " we show that the proposed new spectral direct detection technique utilizing RD code with the collaboration of EDFA considerably improves the performance compared with the conventional Random diagonal codes.**

Keywords: Multiple Access Interference, Random Diagonal Codes

I. Introduction

The concept of the OCDMA systems is the data extraction by a user in the presence of other users or in the presence of multiple access interference (MAI). MAI is the dominant source of corruption in an OCDMA system, therefore efficient design of the code sequences and detection scheme is required to reduce the affect of MAI [1,2]. The presence of multiple users utilizing the same medium, at the same instant and frequencies to transmit their data streams parallel in the OCDMA systems produce MAI. It has been assumed that the cross-correlation value is always equal to zero, because of the data signal is present only on the data segment which further makes the noise equal to zero. In this paper, a new version of code that is RD code has been proposed. It has been assumed that the cross-correlation value is variable, and the data is out-of-phase autocorrelation and cross-correlation values are used [3]. This paper is organized as follows. In section II we will discuss how the code is been develop theoretically and its properties. In section III, we focus on performance analysis of the new code and finally the result and conclusion in section IV & V.

II. Review of Random Diagonal Code

(N, W, λ) is the representation of the random diagonal code where N is the code length, W is the code weight, and λ is it in-phase cross correlation. The blueprint of RD code can be performed by dividing the code sequence into two groups which is code segment and data segment. [4]

A. Data Segment

This segment is represented by a matrix containing only one "1" to keep cross correlation zero at data level ($\lambda = 0$). To understand this concept we can use the matrix ($K \times K$) where K will represent number of users. These matrices contain binary coefficient and a basic Zero cross code (weight = 1) which is defined by [$Y1$]. $Y1$ can be expressed as

$$[\mathrm{Y1}] = \begin{bmatrix} 100 \\ 010 \\ 001 \end{bmatrix}$$

where [$Y1$] consists of ($K \times K$) identity matrices. Notice, for the above expression the cross correlation between any two rows is always zero.

A good set of code is used to obtain the maximum number of codes with maximum weight and with Erbium Doped Fiber Amplifier is significantly better minimum length with the best possible autocorrelation and simulations that the transmission performance of the RD code cross-correlation properties. A code with a larger size should respectively. It will be shown by theoretical studies and give better BER performance. Hence unipolar {0,1} codes which present out on the data segment, and code segment have peculiar property described

B. Code Segment

The code segment matrix can be expressed as follows for $W = 4$, Where [$Y2$] consists of two parts—weight matrix part [W] and basics matrix part [B]. Basic part [B] can be expressed as

$$[\mathrm{Y2}] = \begin{bmatrix} 11010 \\ 01101 \\ 10110 \end{bmatrix}$$

$$[\mathrm{B}] = \begin{bmatrix} 011 \\ 110 \\ 101 \end{bmatrix}$$

And weight part which called M matrix

$$[\mathrm{M}] = \begin{bmatrix} 10 \\ 01 \\ 10 \end{bmatrix}$$

which is meant for incrementing number of weights, let Mi = [M1 M2 M3 …. Mi], where i represents number of [M] matrix and i, is given by

$$I = W - 3 \quad (1)$$

For Lth user matrix [*M*] and [*B*] can where *j* represents the value for Nth user (*j* = 1, 2, . . . ,*L*), and the value of *a j* is either zero or one [5].The weights for code part for both matrix [*M*], [*B*] are equal to *W*−1, so the total combination of code is represented as (L × *N*) where *L* = 3, *N* = 8, as given by [*Z*1],

$$[Z1] = [Y1|Y2]\ [Z1] = \begin{bmatrix} 00111010 \\ 10100110 \\ 10010110 \end{bmatrix}$$

for example if W=5, from Eq.(1) i = 2, so that M2= [M1 M2]

$$[M2] = \begin{bmatrix} 1010 \\ 0101 \\ 1010 \end{bmatrix}$$

Notice that to increase the number of users simultaneously with the increase of code be expressed as

$$M(j) = \begin{bmatrix} 01 \\ 10 \\ 01 \\ 10 \\ .. \\ .. \\ .. \\ .. \\ .. \end{bmatrix} \qquad B(j) = \begin{bmatrix} 011 \\ 110 \\ 101 \\ 011 \\ .. \\ .. \\ .. \\ .. \\ .. \end{bmatrix}$$

III. Performance Analysis

The setup of the conventional RD system using spectral direct detection technique with three users is shown in Fig. 1. Each chip has a spectral width of 0.8 nm. The tests were carried out at a rate of 10 Gb/s for 20-km distance with the ITU-T G.652 standard single-mode optical fiber (SMF).All the attenuation *α* (i.e., 0.25 dB/km), dispersion (i.e., 18 ps/nm km), and nonlinear effects were added. After the splitter, we used a fiber Bragg grating (FBG) spectral amplitude decoder operates to decode the data at data sub-matrix [5].

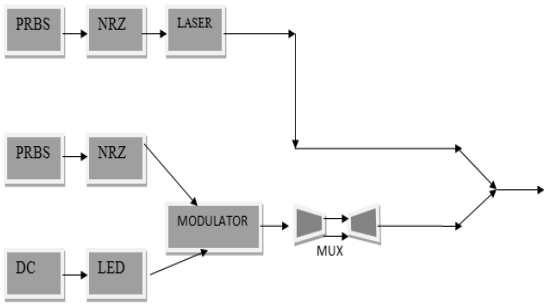

Fig. 1 RD Segment

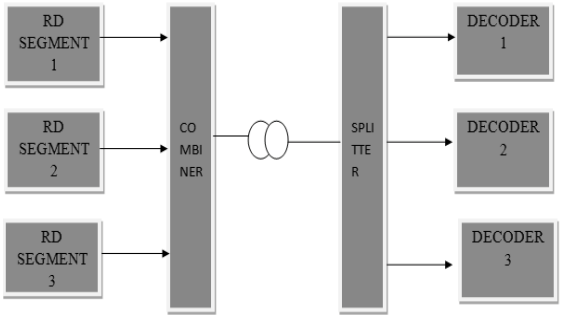

Fig. 2 Simulation Setup of Conventional RD Code without EDFA

The signal was decoded by a photo-detector (PD) followed by low-pass filter (LPF) and error detector, respectively. The transmitted power used was − 10 dBm out of the broadband source. The noise generated at the receivers was set to be random and uncorrelated. The dark current value was 5 nA, and the thermal noise coefficient was 1.8 × 10−23 W/Hz for each of the photo detectors. Fig. 3 shows RD code with EDFA with same parameters and we come to know that RD code performance get enhanced with use of Erbium Doped Fiber.

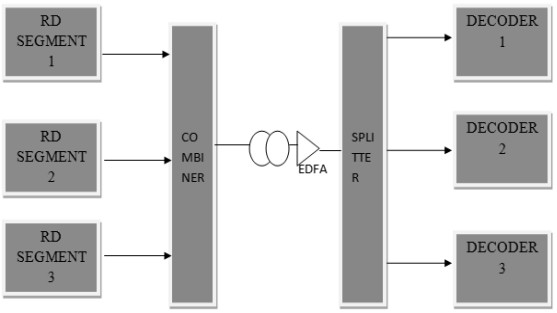

Fig. 3 Simulation Setup of Conventional RD Code with EDFA

IV. Results

The eye pattern diagrams for RD and RD with EDFA codes are shown in Fig. 3. The eyes diagram shown in Fig. 3 clearly depict that the RD code using EDFA gives better performance, having a larger eye opening. The corresponding simulated BER for RD and RD with EDFA codes systems are shown in Fig. 4. The vertical distance between the top of the eye opening and maximum signal level gives the degree of distortion. The Bit Error Rate and eye height of conventional RD code is 0.0017395 and 3.55e-008 and that with EDFA is 2.88348*10exp (-16) and0.00245339 respectively. So this comparison clears the fact that the performance of RD code with EDFA is best. By studying both the Eye patterns we can clearly observe that the Fig is completely scattered and the latter is open wide.

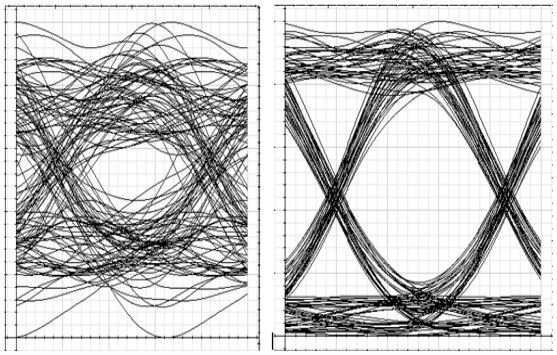

(a) (b)

Fig. 4 Eye Diagram of (a) One of the RD Channels (b) One of the RD Channels with EDFA, at 10 Gbit/s

V. CONCLUSION

In this paper, we have studied the comparison of Conventional Random Diagonal code and Random Diagonal Code with EDFA for Spectral Amplitude-Coding Optical CDMA System. It has been shown that through simulation results RD code with EDFA get better BER performance than conventional one and improved the overall system performance, so as a result RD code with EDFA can also be used in synchronous optical CDMA system for the cancellation of MUI. After simulation we realized that RD codes are shorter and have zero cross correlation which makes phase induced intensity noise zero. Further research on RD Code with EDFA at 20 Gigabits/second can be carried out. [4].

REFERENCES

[1] Lei Xu, I. Glesk, V. Baby, P.R. Prucnal, Multiple access interference (MAI) noise reduction in a 2D optical CDMA system using ultrafast optical thresholding,in: 17th Annual Meeting of the IEEE, vol. 2, November 8–9, 2004, Lasers and Electro-Optics Society, 2004, pp. 591–592.

[2] Jen-Fa Huang, Chao-Chin Yang, Reductions of multiple-access interference in fiber-grating-based optical CDMA network, IEEE Trans. Commun. 50 (10) (2002) 1680–1687.

[3] R.C. Dixon, Spread Spectrum Systems with Commercial Applications, John Wiley & Sons, New York, 1994.[4] HilalFadhil, Syed Aljunid, and Badlished Ahmed,Performance of OCDMA Systems Using Random Diagonal Code for Different Decoders Architecture Schemes,The International Arab Journal of Information Technology, Vol. 7, No. 1, January 2010.

[4] HilalAdnanFadhil ,S.A.Aljunid, R.B. Ahmad,Performance of random diagonal code for OCDMA systems using new spectral direct detection technique,Optical Fiber Technology 15 (2009) 283–289.

[5] J.A. Salehi, Code division multiple-access techniques in optical fiber networks.Part I. Fundamental principles, IEEE Trans. Commun. 37 (8) (1989)824–833.

[6] J. Shah, Optical CDMA, Opt. Photon. News 14 (2003) 42–47.

[7] I.B. Djordjevic, B. Vasic, Combinatorial constructions of optical orthogonalcodes for OCDMA systems, IEEE Commun. Lett.8 (6) (2004).

[8] H. Yin, Optical Code Division Multiple Access Communication Networks Theoryand Application, Springer Link, 2009.

[9] H.A.Fadhil, S.A.Aljunid, R.B.Ahmad, Design considerations of high performance optical CDMA: a new spectral amplitude code based on laser and LED lightsource IET Optoelectronics Journal, vol. 4, The Institution of Engineering and Technology, UK, 2010, pp. 29–34.

.